Cambridge Assessment International Education

Cambridge International AS & A Level

CANDIDATE NAME									
CENTRE NUMBER						CANDIDATE NUMBER				

7722751342 5

PHYSICS **9702/33**

Paper 3 Advanced Practical Skills 1 **October/November 2022**

2 hours

You must answer on the question paper.

You will need: The materials and apparatus listed in the confidential instructions

INSTRUCTIONS

- Answer **all** questions.
- Use a black or dark blue pen. You may use an HB pencil for any diagrams or graphs.
- Write your name, centre number and candidate number in the boxes at the top of the page.
- Write your answer to each question in the space provided.
- Do **not** use an erasable pen or correction fluid.
- Do **not** write on any bar codes.
- You will be allowed to work with the apparatus for a maximum of 1 hour for each question.
- You should record all your observations in the spaces provided in the question paper as soon as these observations are made.
- You may use a calculator.
- You should show all your working and use appropriate units.

INFORMATION

- The total mark for this paper is 40.
- The number of marks for each question or part question is shown in brackets [ ].

For Examiner's Use	
1	
2	
Total	

This document has **16** pages. Any blank pages are indicated.

© UCLES 2022

You may not need to use all of the materials provided.

1 In this experiment, you will determine the resistivity of a metal.

(a) ● Set up the circuit shown in Fig. 1.1.

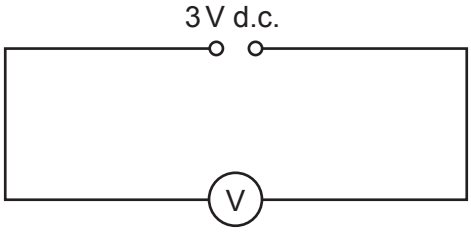

Fig. 1.1

● Record the voltmeter reading *E*.

E = ... V

● Set up the circuit shown in Fig. 1.2.

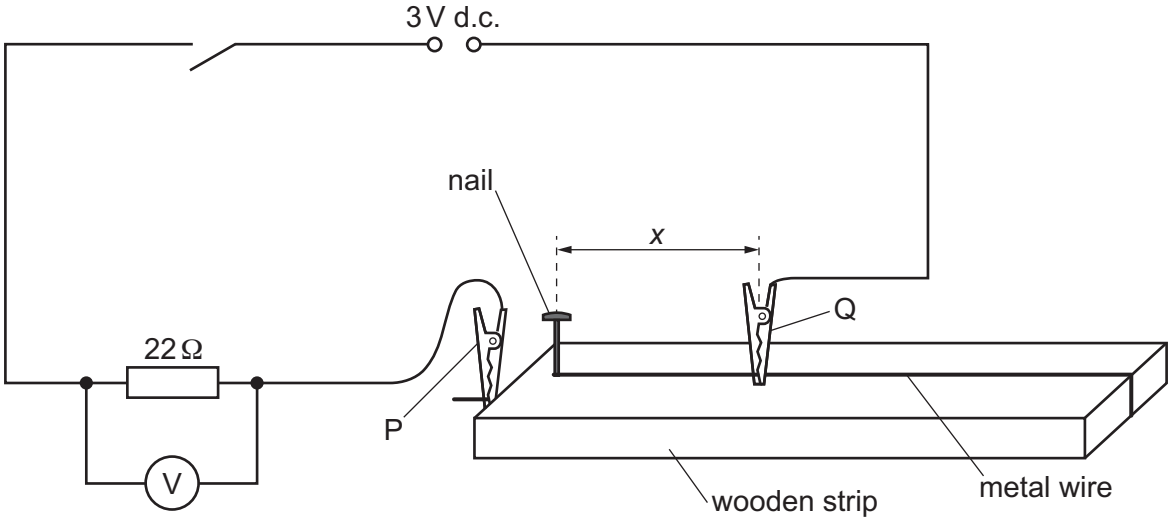

Fig. 1.2 (not to scale)

● P and Q are crocodile clips.

The distance between the nail and Q is *x*, as shown in Fig. 1.2.

Adjust the position of Q until *x* is approximately 45 cm.

© UCLES 2022

- Close the switch.
- The voltmeter reading is V.

  Measure and record x and V.

x = ...

V = ...

- Open the switch.

[1]

(b) Change x by adjusting the position of Q on the wire. Use six different values of x. For each value of x, measure V.

Record your results in a table. Include values of $\frac{1}{V}$ in your table.

[8]

(c) **(i)** Plot a graph of $\frac{1}{V}$ on the y-axis against x on the x-axis. [3]

(ii) Draw the straight line of best fit. [1]

(iii) Determine the gradient and y-intercept of this line.

gradient = ...

y-intercept = ...
[2]

© UCLES 2022

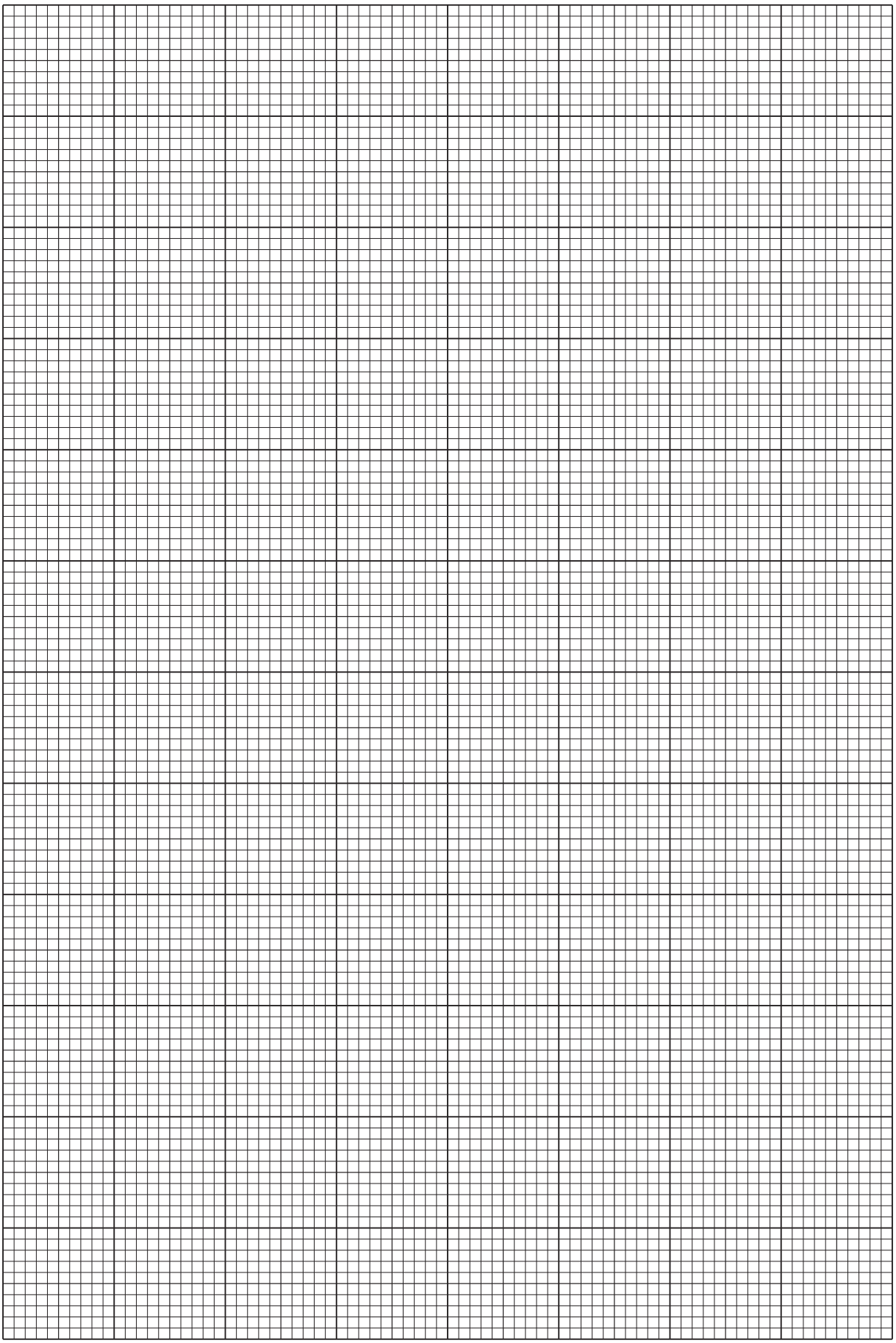

(d) It is suggested that the quantities V and x are related by the equation

$$\frac{1}{V} = Ax + B$$

where A and B are constants.

Using your answers in **(c)(iii)**, determine the values of A and B.
Give appropriate units.

A = ...

B = ...
[1]

(e) **(i)** Use a micrometer to measure the diameter d of the wire.

d = ... [2]

(ii) It is suggested that A is given by the equation

$$A = -\frac{4\rho}{\pi d^2 ER}$$

where R is 22 Ω and ρ is the resistivity of the metal.

Using your answers in **(a)**, **(d)** and **(e)(i)**, determine a value for ρ.
Give an appropriate unit.

ρ = ... [2]

[Total: 20]

© UCLES 2022

BLANK PAGE

You may not need to use all of the materials provided.

2 In this experiment, you will investigate the extension of two springs.

(a) (i) ● Set up the apparatus as shown in Fig. 2.1.

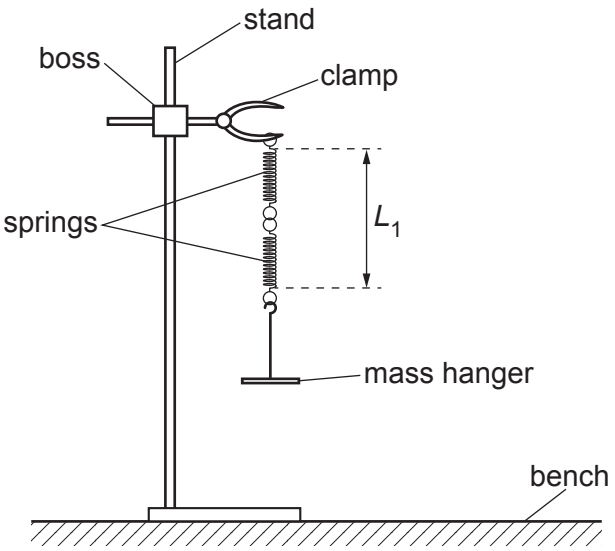

Fig. 2.1

● The length L_1 of the spring combination is measured from the top coil of the top spring to the bottom coil of the bottom spring, as shown in Fig. 2.1.

Measure and record L_1.

L_1 = ... [1]

(ii) Estimate the percentage uncertainty in your value of L_1. Show your working.

percentage uncertainty = ... % [1]

(iii) ● Add the slotted mass to the mass hanger.

● The new length of the spring combination is L_2.

Measure and record L_2.

L_2 = ...

© UCLES 2022

- The spring constant k is given by the equation

$$k = \frac{W}{(L_2 - L_1)}$$

where W is 0.981 N.

Calculate k.

k = ...

- Remove the slotted mass and the mass hanger from the springs.

[1]

(iv) Justify the number of significant figures that you have given for your value of k.

.....

.....

..... [1]

(b) (i) - Use the balance to measure and record the total mass M of the four **smaller** steel nuts.

M = ...

- The volume V of the four nuts is given by the equation

$$V = \frac{M}{\rho_{\text{steel}}}$$

where the density ρ_{steel} of steel is 7.8 g cm^{-3}.

Calculate V.

V = ...

[2]

(ii) ● Set up the apparatus using the four **smaller** nuts as shown in Fig. 2.2.

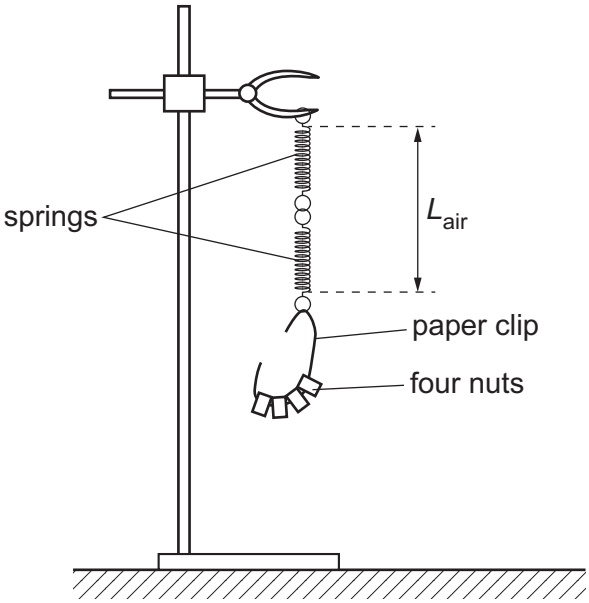

Fig. 2.2

● Bend the paper clip to hold the four nuts.

● The length of the spring combination is L_{air}.

Measure and record L_{air}.

L_{air} = ...

● Gently lower the nuts into the oil until they are submerged but not touching the bottom of the beaker, as shown in Fig. 2.3.

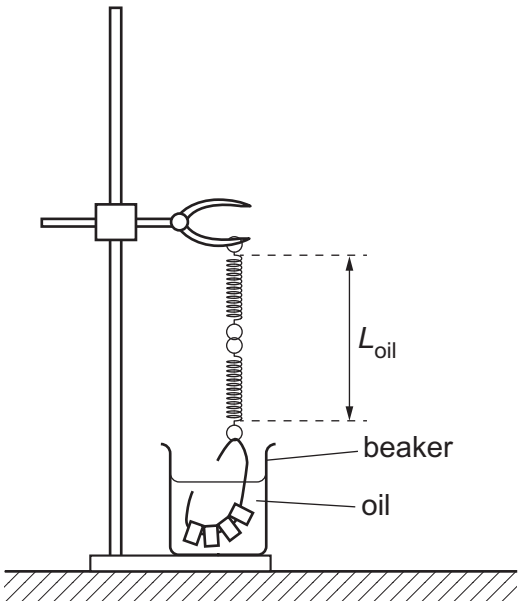

Fig. 2.3

- The length of the spring combination is L_{oil}.

  Measure and record L_{oil}.

  L_{oil} = ...

- Calculate $(L_{air} - L_{oil})$.

  $(L_{air} - L_{oil})$ = ...

- Remove the four nuts from the oil and place them on the tissue in the container.

[1]

(iii) Repeat **(b)(i)** and **(b)(ii)** with the four **larger** steel nuts.

M = ...

V = ...

L_{air} = ...

L_{oil} = ...

$(L_{air} - L_{oil})$ = ...

[2]

(c) It is suggested that the relationship between L_{air}, L_{oil} and V is

$$(L_{air} - L_{oil}) = ZV$$

where Z is a constant.

Using your data, calculate two values of Z.

first value of Z = ...

second value of Z = ...
[1]

(d) It is suggested that the percentage uncertainty in the values of Z is 5%.

Using this uncertainty, explain whether your results support the relationship in **(c)**.

.....

.....

.....

..... [1]

© UCLES 2022

(e) The density ρ_{oil} of the oil is related to Z by

$$Z = \frac{\rho_{oil} g}{k}$$

where g is $9.81\,N\,kg^{-1}$.

Use your second value of Z to determine ρ_{oil}. Give an appropriate unit.

ρ_{oil} = ... [1]

(f) (i) Describe **four** sources of uncertainty or limitations of the procedure for this experiment.

For any uncertainties in measurement that you describe, you should state the quantity being measured and a reason for the uncertainty.

1 .....

.....

2 .....

.....

3 .....

.....

4 .....

.....

[4]

(ii) Describe **four** improvements that could be made to this experiment. You may suggest the use of other apparatus or different procedures.

1 .....

.....

2 .....

.....

3 .....

.....

4 .....

.....

[4]

[Total: 20]

© UCLES 2022

BLANK PAGE

BLANK PAGE

Permission to reproduce items where third-party owned material protected by copyright is included has been sought and cleared where possible. Every reasonable effort has been made by the publisher (UCLES) to trace copyright holders, but if any items requiring clearance have unwittingly been included, the publisher will be pleased to make amends at the earliest possible opportunity.

To avoid the issue of disclosure of answer-related information to candidates, all copyright acknowledgements are reproduced online in the Cambridge Assessment International Education Copyright Acknowledgements Booklet. This is produced for each series of examinations and is freely available to download at www.cambridgeinternational.org after the live examination series.

Cambridge Assessment International Education is part of Cambridge Assessment. Cambridge Assessment is the brand name of the University of Cambridge Local Examinations Syndicate (UCLES), which is a department of the University of Cambridge.

© UCLES 2022